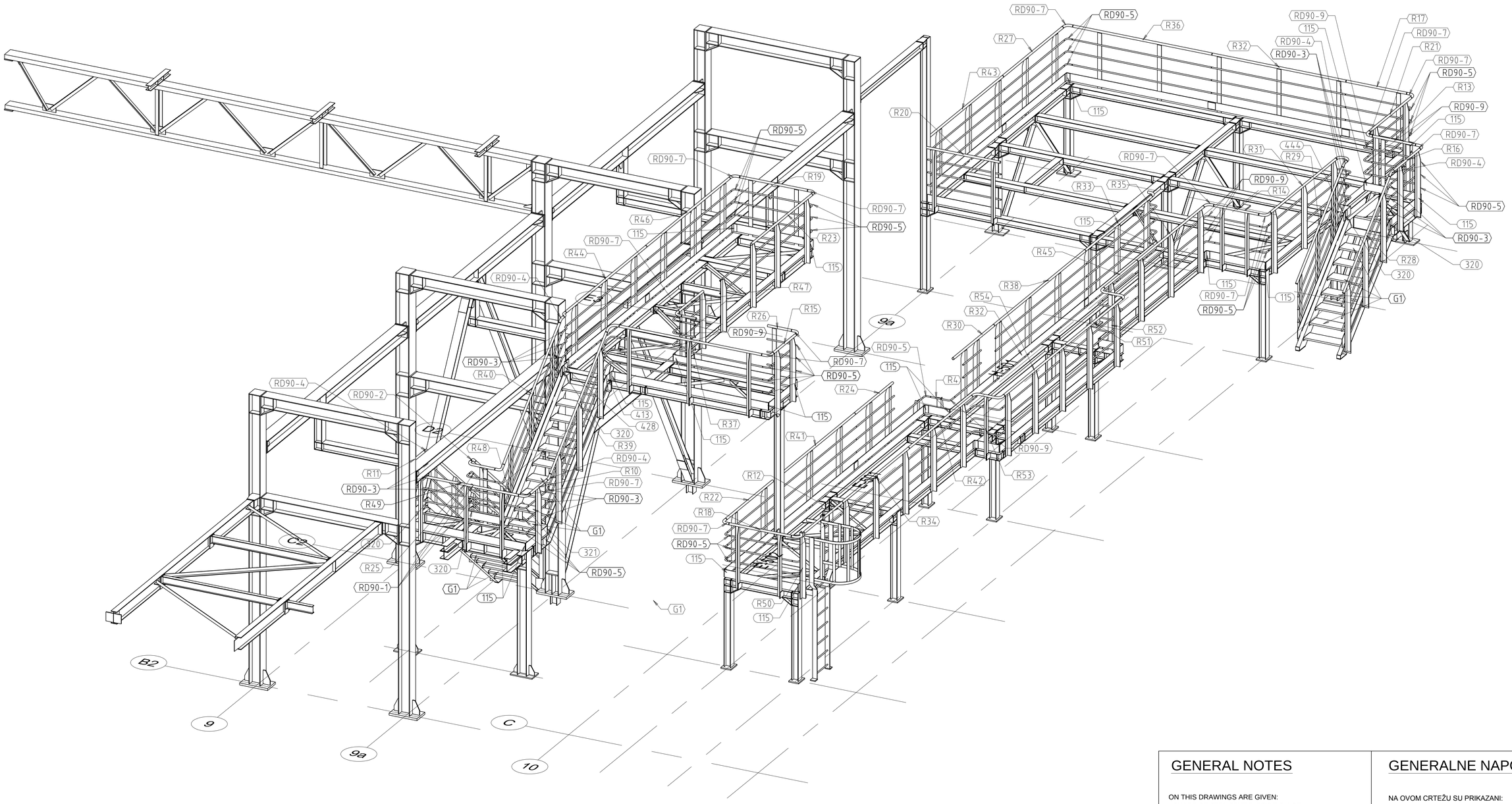

GENERAL NOTES

ON THIS DRAWINGS ARE GIVEN:
- SHAPE OF STRUCTURE, POSITION OF ELEMENTS, SERVICE PLATFORMS, RAILINGS, ETC.
- STRUCTURAL MEMBERS SECTION
-CONNECTIONS ARE DESIGNED ACCORDING STATICAL CALCULATIONS

ALL HEIGHTS REFER TO TOP OF STEEL UNLESS OTHERWISE NOTED
TOS = TOP OF STEEL
TOG = TOP OF GRATING
BOS = BOTTOM OF STEEL
FP = FIXPOINT
SP = SLIDINGPOINT
TOC= TOP OF CONCRETE
U/S BP= UNDERSIDE OF BASE PLATE

MATERIALS
ACCORDING TO SPECIFICATION STRUCTURAL STEEL:
S 235 JRG2
RAILING, LADDERS: S 235 JRG1
GRATINGS: 30X30X3 HOT DIPPED GALVANIZED
BOLTS: QUALITY 8.8 AND 5.6 ACCORDING BOLT LIST AND RELATED DRAWINGS

DIMENSIONS
ALL DIMENSIONS ARE IN MM
ELEVATIONS ARE IN M
℄ ARE IN M
COORDINATES ARE IN M

GENERALNE NAPOMENE

NA OVOM CRTEŽU SU PRIKAZANI:
- PROFILI STRUKTURE, POZICIJE ELEMENATA, SERVISNIH PLATFORMA, OGRADA, ITD.
- PRESJECI ELEMENATA KONSTRUKCIJE
-SPOJEVI SU IZVEDENI PREMA STATIČKOM PRORAČUNU

SVE VISINE SE ODNOSE NA GORNJU KOTU ČELIKA OSIM AKO DRUGAČIJE NIJE NAZNAČENO:
TOS = GORNJA KOTA ČELIKA
TOG = GORNJA KOTA PODNICA
BOS = DONJA KOTA ČELIKA
FP = FIKSNA TOČKA
SP = KLIZNA TOČKA
TOC= GORNJA KOTA BETONA
U/S BP= DONJA KOTA LEŽAJNE PLOČE

MATERIJALI
PREMA SPECIFIKACIJAMA ČELIČNIH KONSTRUKCIJA:
S 235 JRG2
OGRADE, LJESTVE: S 235 JRG1
PODNICE: 30X30X3 VRUĆE POCINČANE
VIJCI: KVALITETE 8.8 I 5.6 PREMA SPECIFIKACIJI VIJAKA I REFERENTNIM CRTEŽIMA

MJERE
SVE MJERE SU U MM
VISINE SU U M
℄ SU U M
KOORDINATE SU U M

ELEVATION REFERENCE SYSTEM OF PLANT:
HIGH POINT OF PAVING= 100.00 M= 32,00 M ABOVE ADRIATIC SEA LEVEL (ASL)
REFERENTNI SISTEM VIŠINA POSTROJENJA:
NAJVIŠA TOČKA OPLOČENJA= 100.00 M= 32,00 M IZNAD RAZINE MORA

prokon
PROKON d.o.o. Jalkovec
Varaždinska ulica, I.odvojak 13, Varaždin
tel: +385 42 200 555 fax: +385 42 200 554
e-mail: prokon@prokon.hr www.prokon.hr

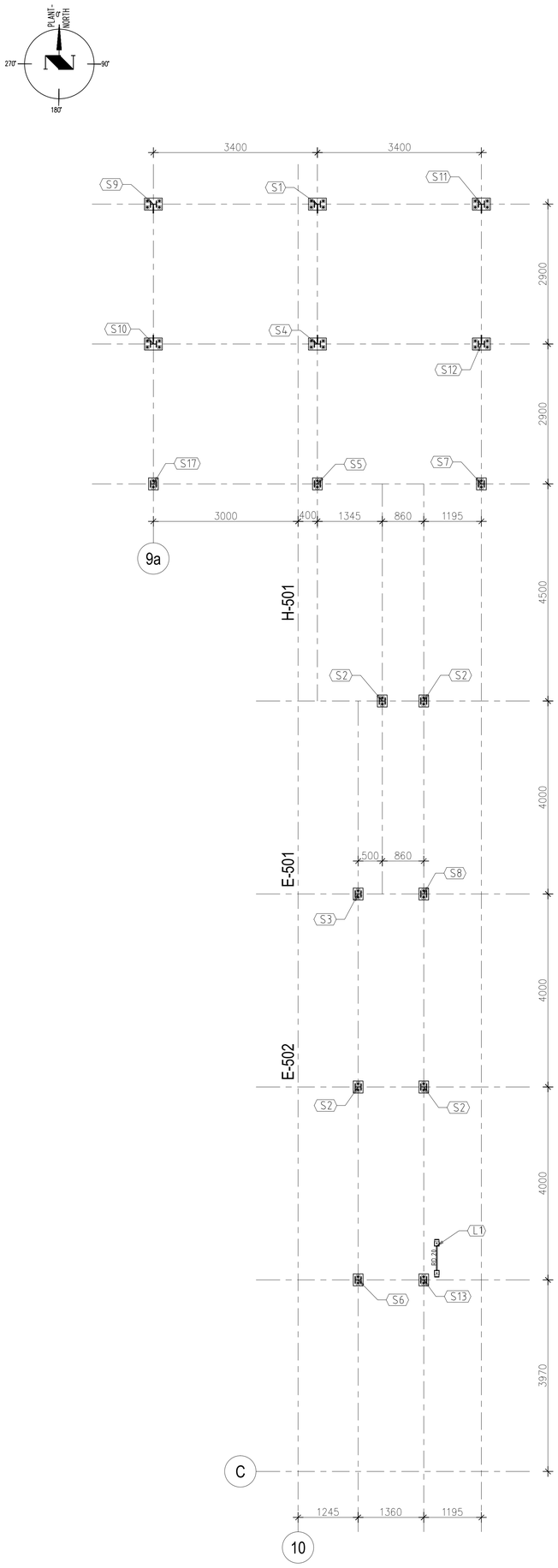

PLAN POZICIJA, TLOCRT NA KOTI +100,250 (M1:50)
LAYOUT, PLAN AT +100,250 (Sc1:50)

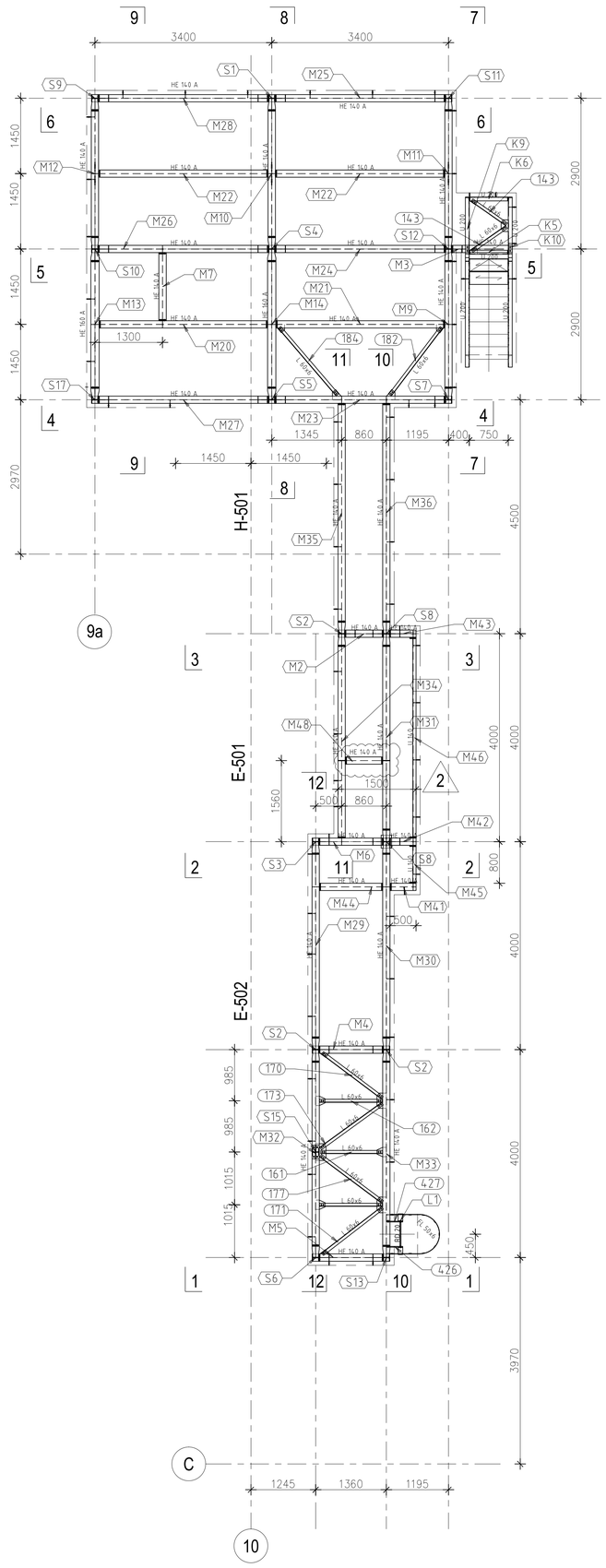

PLAN POZICIJA, TLOCRT NA KOTI +102,00 (M1:50)
LAYOUT, PLAN AT +102,00 (Sc1:50)

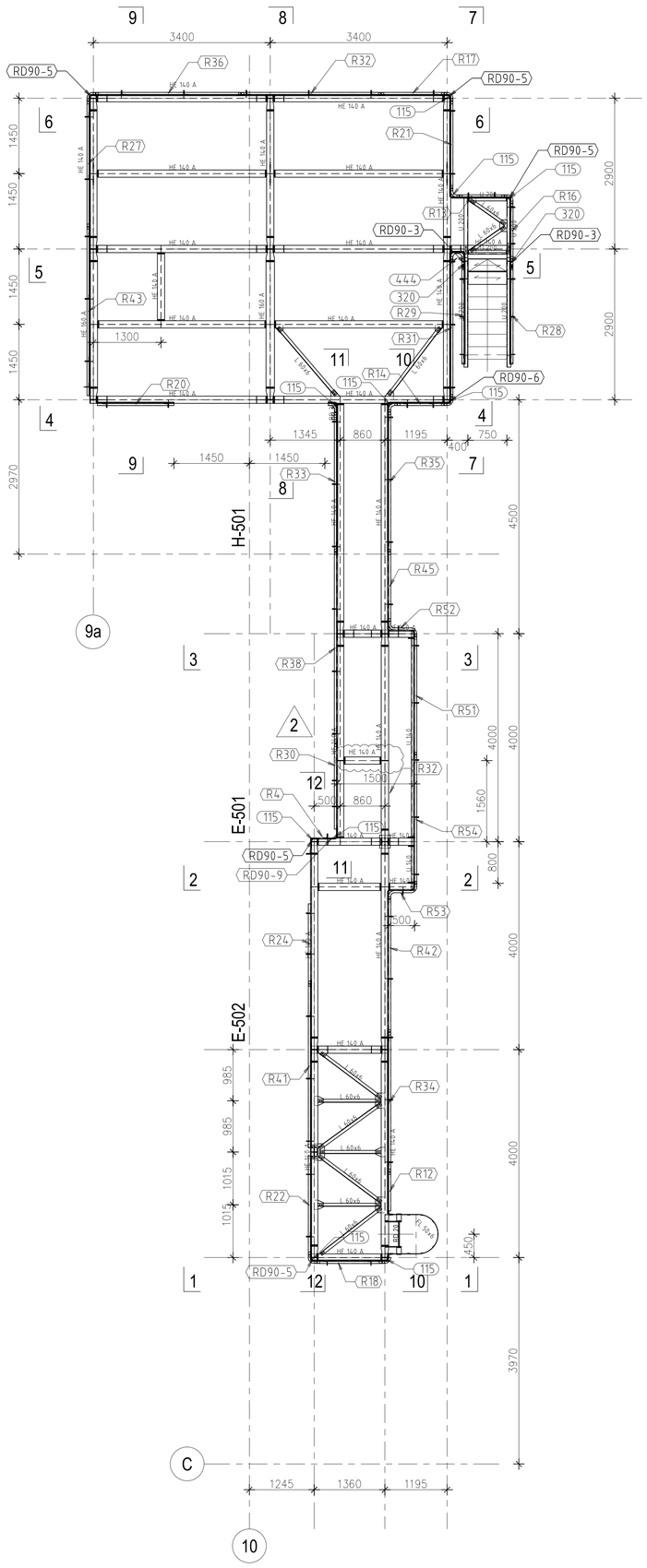

PLAN POZICIJA, TLOCRT NA KOTI +102,00 (M1:50)
LAYOUT, PLAN AT +102,00 (Sc1:50)

GENERAL NOTES

ON THIS DRAWINGS ARE GIVEN:
- SHAPE OF STRUCTURE, POSITION OF ELEMENTS, SERVICE PLATFORMS, RAILINGS, ETC.
- STRUCTURAL MEMBERS SECTION
-CONNECTIONS ARE DESIGNED ACCORDING STATICAL CALCULATIONS

ALL HEIGHTS REFER TO TOP OF STEEL UNLESS OTHERWISE NOTED
TOS = TOP OF STEEL
TOG = TOP OF GRATING
BOS = BOTTOM OF STEEL
FP = FIXPOINT
SP = SLIDINGPOINT
TOC= TOP OF CONCRETE
U/S BP= UNDERSIDE OF BASE PLATE

MATERIALS
ACCORDING TO SPECIFICATION STRUCTURAL STEEL: S 235 JRG2
RAILING, LADDERS: S 235 JRG1
GRATINGS: 30X30X3 HOT DIPPED GALVANIZED
BOLTS: QUALITY 8.8 AND 5.6 ACCORDING BOLT LIST AND RELATED DRAWINGS

DIMENSIONS
ALL DIMENSIONS ARE IN MM
ELEVATIONS ARE IN M
L ARE IN M
COORDINATES ARE IN M

GENERALNE NAPOMENE

NA OVOM CRTEŽU SU PRIKAZANI:
- PROFILI STRUKTURE, POZICIJE ELEMENATA, SERVISNIH PLATFORMA, OGRADA, ITD.
- PRESJECI ELEMENATA KONSTRUKCIJE
-SPOJEVI SU IZVEDENI PREMA STATIČKOM PRORAČUNU

SVE VISINE SE ODNOSE NA GORNJU KOTU ČELIKA OSIM AKO DRUGAČIJE NIJE NAZNAČENO:
TOS = GORNJA KOTA ČELIKA
TOG = GORNJA KOTA PODNICA
BOS = DONJA KOTA ČELIKA
FP = FIKSNA TOČKA
SP = KLIZNA TOČKA
TOC= GORNJA KOTA BETONA
U/S BP= DONJA KOTA LEŽAJNE PLOČE

MATERIJALI
PREMA SPECIFIKACIJAMA ČELIČNIH KONSTRUKCIJA: S 235 JRG2
OGRADE, LJESTVE: S 235 JRG1
PODNICE: 30X30X3 VRUĆE POCINČANE
VIJCI: KVALITETE 8.8 I 5.6 PREMA SPECIFIKACIJI VIJAKA I REFERENTNIM CRTEŽIMA

MJERE
SVE MJERE SU U MM
VISINE SU U M
L SU U M
KOORDINATE SU U M

ELEVATION REFERENCE SYSTEM OF PLANT:
HIGH POINT OF PAVING= 100.00 M= 32,00 M ABOVE ADRIATIC SEA LEVEL (ASL)
REFERENTNI SUSTAV VISINA POSTROJENJA:
NAJVIŠA TOČKA OPLOČENJA= 100.00 M= 32,00 M IZNAD RAZINE MORA

prokon
PROKON d.o.o. Jalkovec
Varaždinska ulica, I.odvojak 13, Varaždin
tel: +385 42 200 555 fax: +385 42 200 554
e-mail: prokon@prokon.hr www.prokon.hr

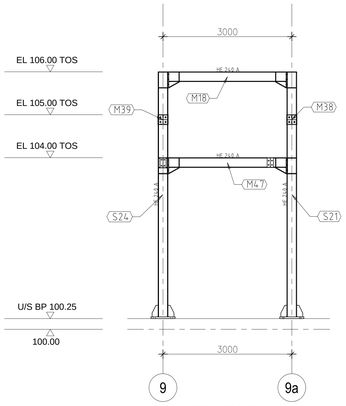

PLAN POZICIJA, PRESJEK U OSI B2 (M1:50)
LAYOUT, SECTION IN AXIS B2 (Sc1:50)

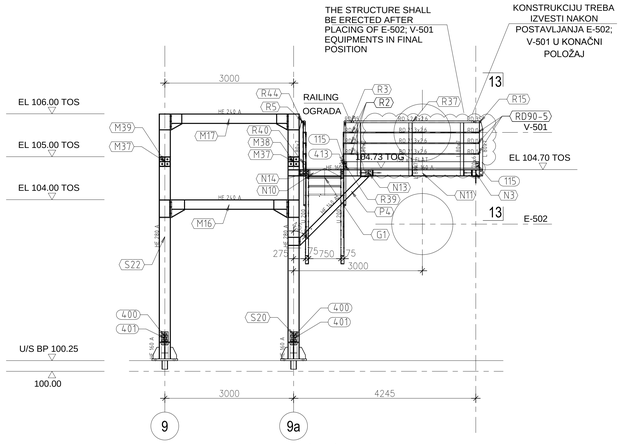

PLAN POZICIJA, PRESJEK U OSI C2 (M1:50)
LAYOUT, SECTION IN AXIS C2 (Sc1:50)

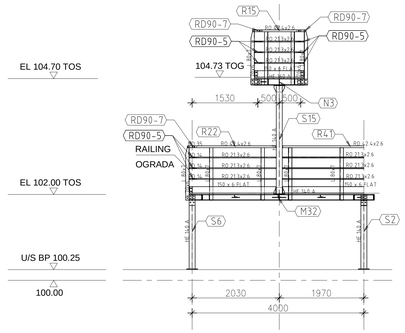

PLAN POZICIJA, PRESJEK 13-13 (M1:50)
LAYOUT, SECTION 13-13 (Sc1:50)

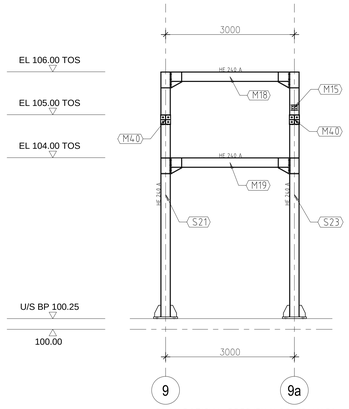

PLAN POZICIJA, PRESJEK U OSI E3 (M1:50)
LAYOUT, SECTION IN AXIS E3 (Sc1:50)

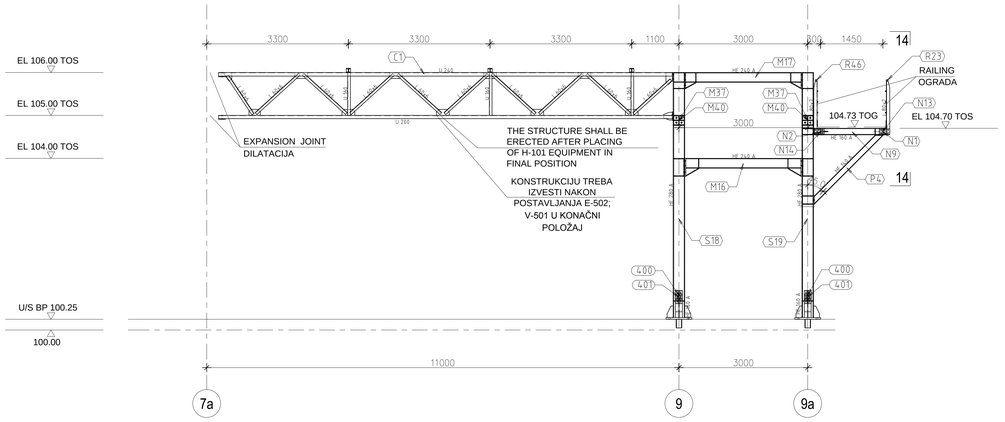

PLAN POZICIJA, PRESJEK U OSI D2 (M1:50)
LAYOUT, SECTION IN AXIS D2 (Sc1:50)

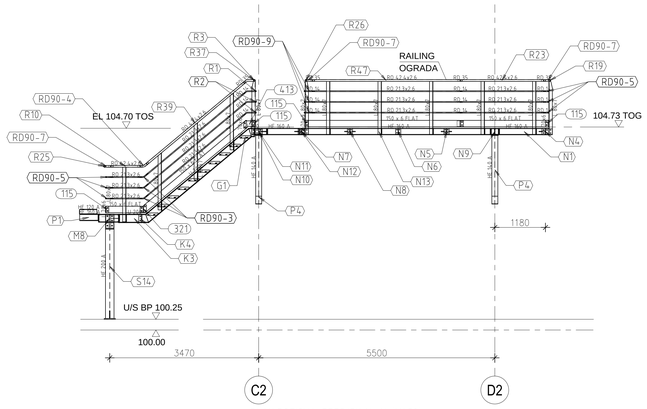

PLAN POZICIJA, PRESJEK 14-14 (M1:50)
LAYOUT, SECTION 14-14 (Sc1:50)

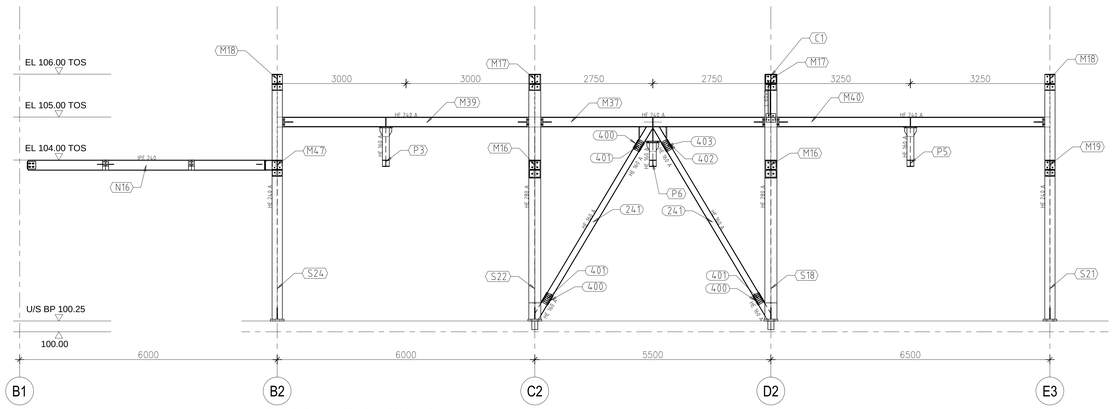

PLAN POZICIJA, PRESJEK U OSI 9 (M1:50)
LAYOUT, SECTION IN AXIS 9 (Sc1:50)

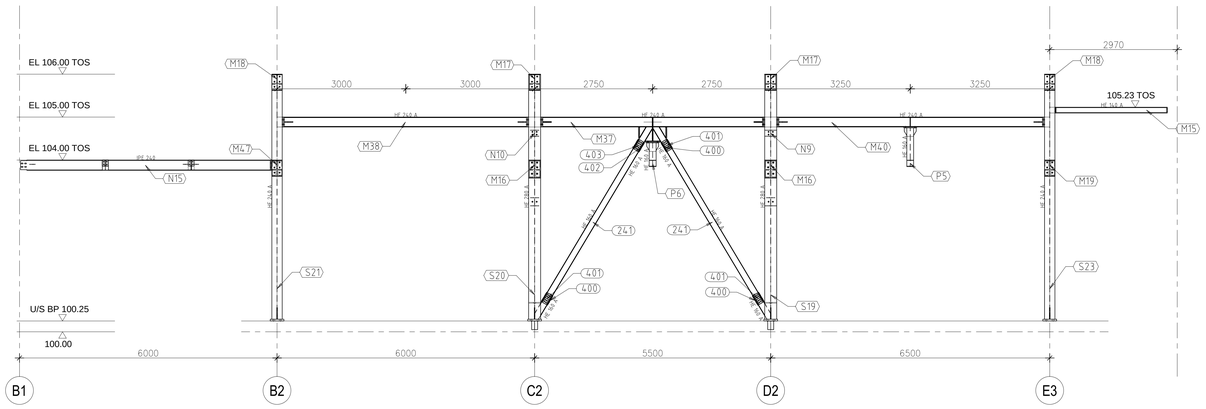

PLAN POZICIJA, PRESJEK U OSI 9a (M1:50)
LAYOUT, SECTION IN AXIS 9a (Sc1:50)

GENERAL NOTES

ON THIS DRAWINGS ARE GIVEN:
- SHAPE OF STRUCTURE, POSITION OF ELEMENTS, SERVICE PLATFORMS, RAILINGS, ETC.
- STRUCTURAL MEMBERS SECTION
-CONNECTIONS ARE DESIGNED ACCORDING STATICAL CALCULATIONS

ALL HEIGHTS REFER TO TOP OF STEEL UNLESS OTHERWISE NOTED
TOS = TOP OF STEEL
TOG = TOP OF GRATING
BOS = BOTTOM OF STEEL
FP = FIXPOINT
SP = SLIDINGPOINT
TOC= TOP OF CONCRETE
U/S BP= UNDERSIDE OF BASE PLATE

MATERIALS
ACCORDING TO SPECIFICATION STRUCTURAL STEEL: S 235 JRG2
RAILING, LADDERS: S 235 JRG1
GRATINGS: 30X30X3 HOT DIPPED GALVANIZED
BOLTS: QUALITY 8.8 AND 5.6 ACCORDING BOLT LIST AND RELATED DRAWINGS

DIMENSIONS
ALL DIMENSIONS ARE IN MM
ELEVATIONS ARE IN M
L ARE IN M
COORDINATES ARE IN M

GENERALNE NAPOMENE

NA OVOM CRTEŽU SU PRIKAZANI:
- PROFILI STRUKTURE, POZICIJE ELEMENATA, SERVISNIH PLATFORMA, OGRADA, ITD.
- PRESJECI ELEMENATA KONSTRUKCIJE
-SPOJEVI SU IZVEDENI PREMA STATIČKOM PRORAČUNU

SVE VISINE SE ODNOSE NA GORNJU KOTU ČELIKA OSIM AKO DRUGAČIJE NIJE NAZNAČENO:
TOS = GORNJA KOTA ČELIKA
TOG = GORNJA KOTA PODNICA
BOS = DONJA KOTA ČELIKA
FP = FIKSNA TOČKA
SP = KLIZNA TOČKA
TOC= GORNJA KOTA BETONA
U/S BP= DONJA KOTA LEŽAJNE PLOČE

MATERIJALI
PREMA SPECIFIKACIJAMA ČELIČNIH KONSTRUKCIJA: S 235 JRG2
OGRADE, LJESTVE: S 235 JRG1
PODNICE: 30X30X3 VRUĆE POCINČANE
VIJCI: KVALITETE 8.8 I 5.6 PREMA SPECIFIKACIJI VIJAKA I REFERENTNIM CRTEŽIMA

MJERE
SVE MJERE SU U MM
VISINE SU U M
L SU U M
KOORDINATE SU U M

ELEVATION REFERENCE SYSTEM OF PLANT
HIGH POINT OF STRUCTURE: 105.23 M ABOVE MEAN SEA LEVEL (ASL)
RESTRICTION SUITE VISINA POSTROJENJA
NAJVIŠA TOČKA OPLOČENJA= 105.00 M= 32.00 M IZNAD RAZINE MORA

PROKON d.o.o. Jakovec
Varaždinska ulica 1 odvojak 13, Varaždin
tel: +385 42 200 555 fax: +385 42 200 554
e-mail: prokon@prokon.hr www.prokon.hr

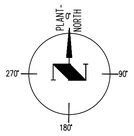

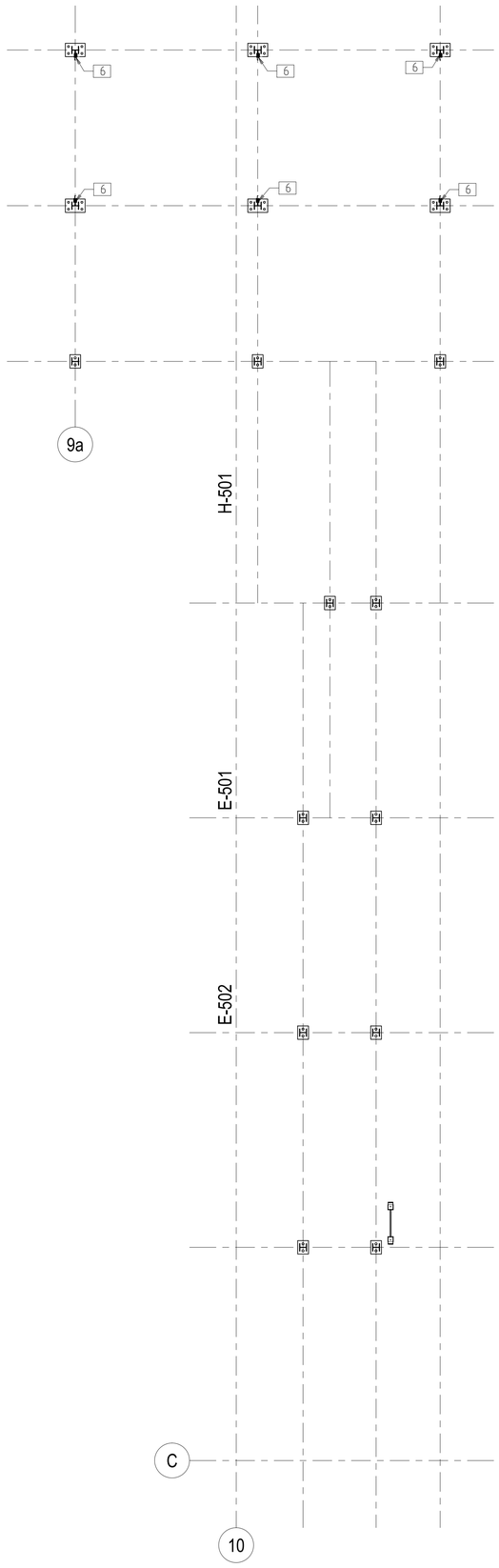

PLAN POZICIJA VIJAKA, TLOCRT NA KOTI +100,250 (M1:50)
BOLTS LAYOUT, PLAN AT +100,250 (Sc1:50)

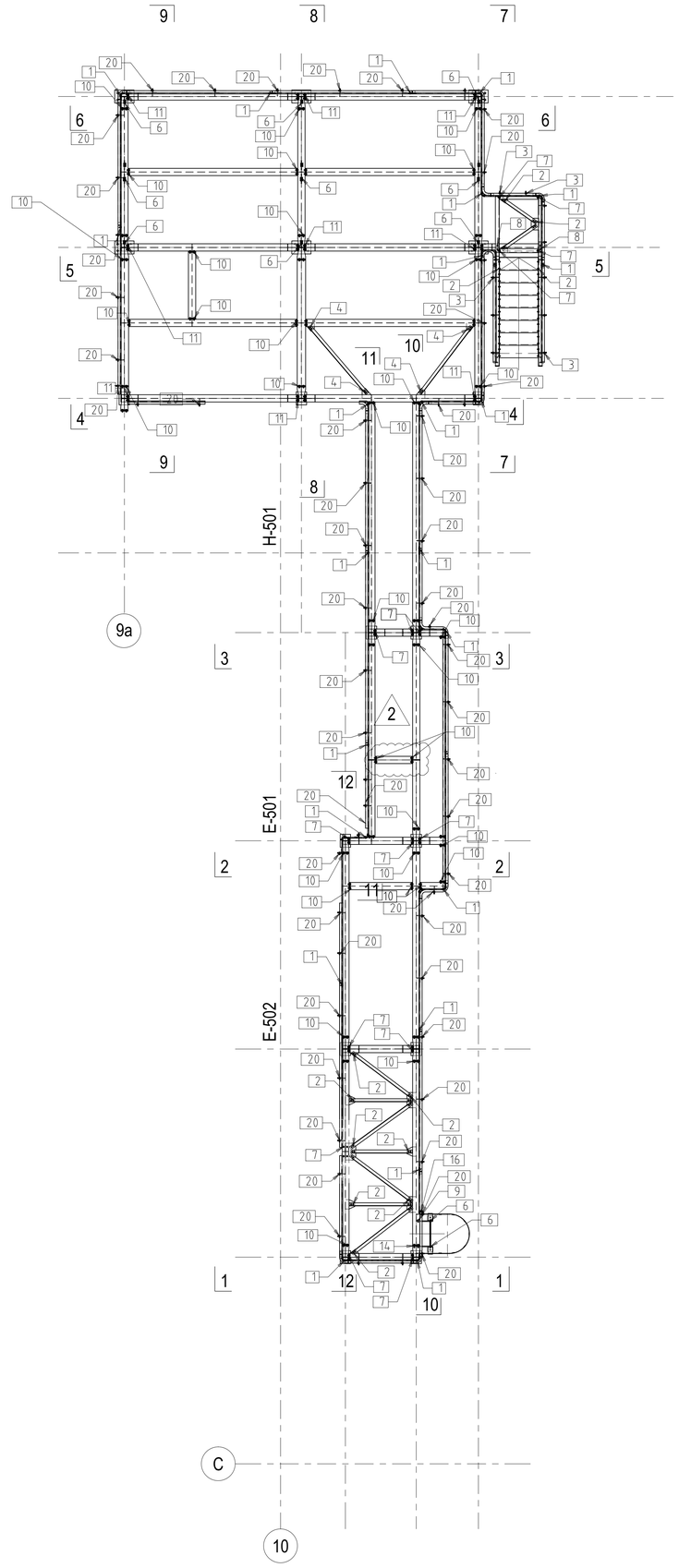

PLAN POZICIJA VIJAKA, TLOCRT NA KOTI +102,00 (M1:50)
BOLTS LAYOUT, PLAN AT +102,00 (Sc1:50)

GENERAL NOTES

ON THIS DRAWINGS ARE GIVEN:
- SHAPE OF STRUCTURE, POSITION OF ELEMENTS, SERVICE PLATFORMS, RAILINGS, ETC.
- STRUCTURAL MEMBERS SECTION
-CONNECTIONS ARE DESIGNED ACCORDING STATICAL CALCULATIONS

ALL HEIGHTS REFER TO TOP OF STEEL UNLESS OTHERWISE NOTED
TOS = TOP OF STEEL
TOG = TOP OF GRATING
BOS = BOTTOM OF STEEL
FP = FIXPOINT
SP = SLIDINGPOINT
TOC= TOP OF CONCRETE
U/S BP= UNDERSIDE OF BASE PLATE

MATERIALS:
ACCORDING TO SPECIFICATION STRUCTURAL STEEL: S 235 JRG2
RAILING, LADDERS: S 235 JRG1
GRATINGS: 30X30X3 HOT DIPPED GALVANIZED
BOLTS: QUALITY 8.8 AND 5.6 ACCORDING BOLT LIST AND RELATED DRAWINGS

DIMENSIONS
ALL DIMENSIONS ARE IN MM
ELEVATIONS ARE IN M
℄ ARE IN M
COORDINATES ARE IN M

GENERALNE NAPOMENE

NA OVOM CRTEŽU SU PRIKAZANI:
- PROFILI STRUKTURE, POZICIJE ELEMENATA, SERVISNIH PLATFORMA, OGRADA, ITD.
- PRESJECI ELEMENATA KONSTRUKCIJE
-SPOJEVI SU IZVEDENI PREMA STATIČKOM PRORAČUNU

SVE VISINE SE ODNOSE NA GORNJU KOTU ČELIKA OSIM AKO DRUGAČIJE NIJE NAZNAČENO:
TOS = GORNJA KOTA ČELIKA
TOG = GORNJA KOTA PODNICA
BOS = DONJA KOTA ČELIKA
FP = FIKSNA TOČKA
SP = KLIZNA TOČKA
TOC= GORNJA KOTA BETONA
U/S BP= DONJA KOTA LEŽAJNE PLOČE

MATERIJALI
PREMA SPECIFIKACIJAMA ČELIČNIH KONSTRUKCIJA: S 235 JRG2
OGRADE, LJESTVE: S 235 JRG1
PODNICE: 30X30X3 VRUČE POCINČANE
VIJCI: KVALITETE 8.8 I 5.6 PREMA SPECIFIKACIJI VIJAKA I REFERENTNIM CRTEŽIMA

MJERE
SVE MJERE SU U MM
VISINE SU U M
℄ SU U M
KOORDINATE SU U M

ELEVATION REFERENCE SYSTEM OF PLANT:
HIGH POINT OF PAVING= 100.00 M= 32.00 M ABOVE ADRIATIC SEA LEVEL (ASL)
REFERENTNI SUSTAV VISINA POSTROJENJA:
NAJVIŠA TOČKA OPLOČENJA= 100.00 M= 32.00 M IZNAD RAZINE MORA

prokon
PROKON d.o.o. Jalkovec
Varaždinska ulica 1,dobrojak 13, Varaždin
tel: +385 42 200 555 fax: +385 42 200 554
e-mail: prokon@prokon.hr www.prokon.hr

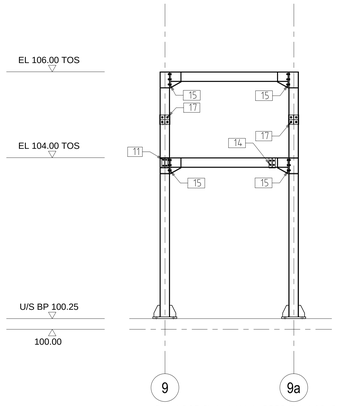

PLAN POZICIJA VIJAKA, PRESJEK U OSI B2 (M1:50)
BOLTS LAYOUT, SECTION IN AXIS B2 (Sc1:50)

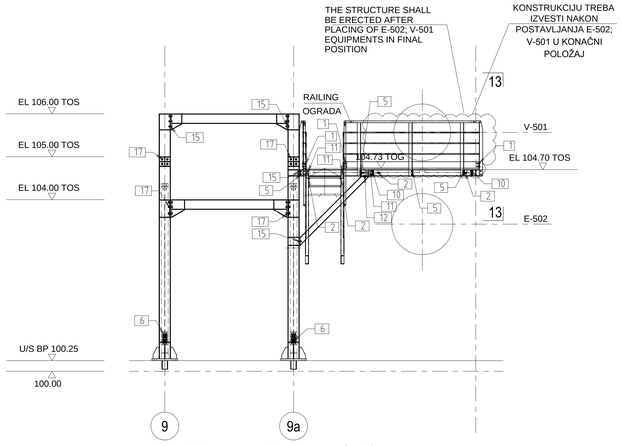

PLAN POZICIJA VIJAKA, PRESJEK U OSI C2 (M1:50)
BOLTS LAYOUT, SECTION IN AXIS C2 (Sc1:50)

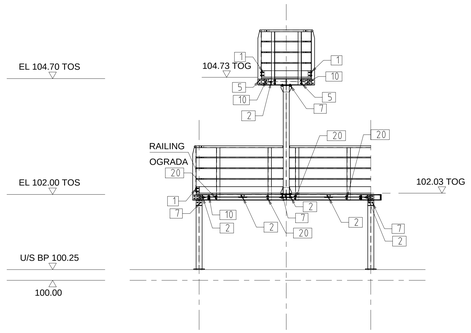

PLAN POZICIJA VIJAKA, PRESJEK 13-13 (M1:50)
BOLTS LAYOUT, SECTION 13-13 (Sc1:50)

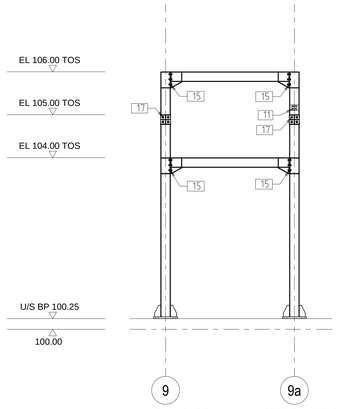

PLAN POZICIJA VIJAKA, PRESJEK U OSI E3 (M1:50)
BOLTS LAYOUT, SECTION IN AXIS E3 (Sc1:50)

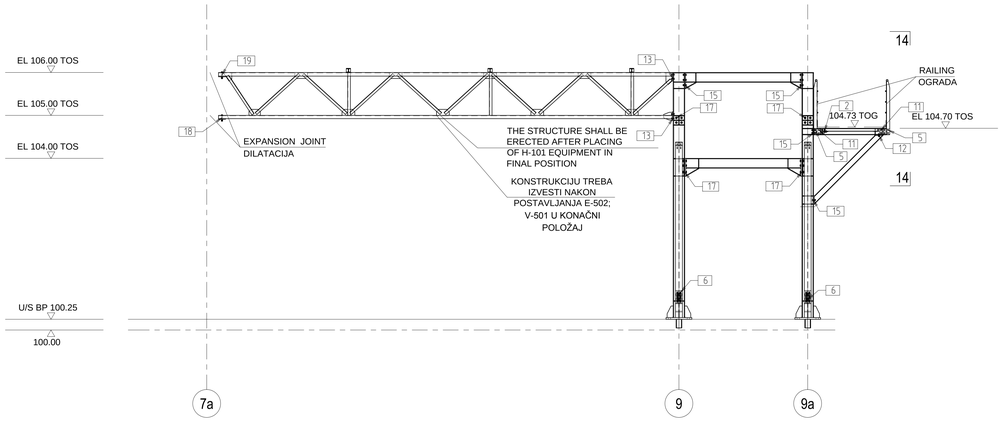

PLAN POZICIJA VIJAKA, PRESJEK U OSI D2 (M1:50)
BOLTS LAYOUT, SECTION IN AXIS D2 (Sc1:50)

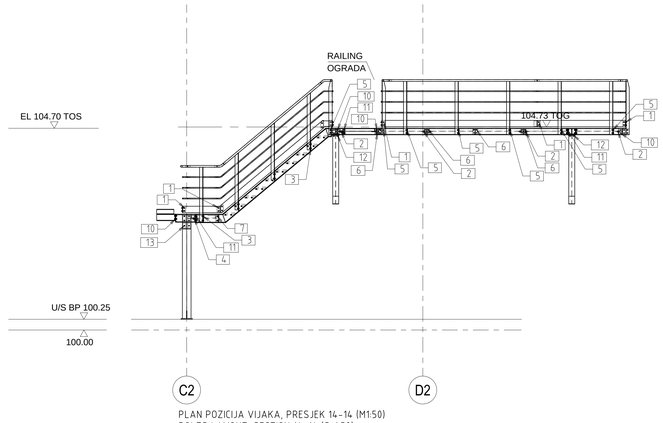

PLAN POZICIJA VIJAKA, PRESJEK 14-14 (M1:50)
BOLTS LAYOUT, SECTION 14-14 (Sc1:50)

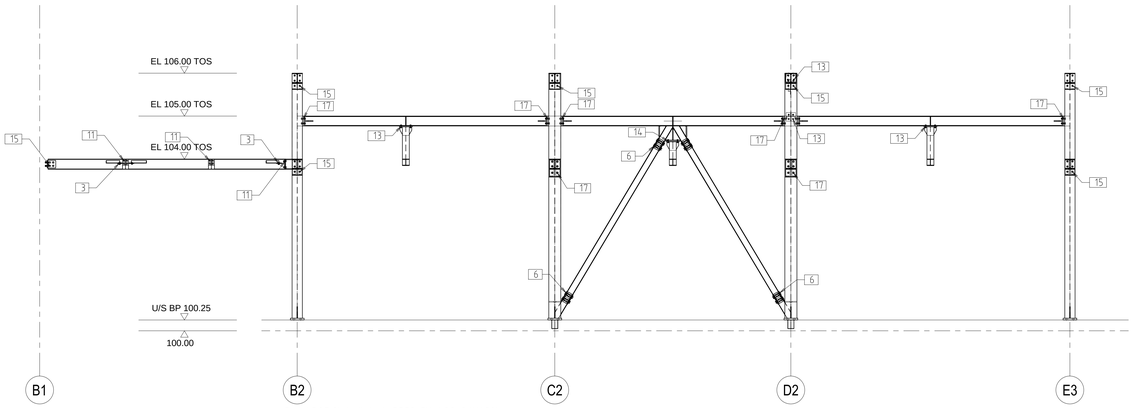

PLAN POZICIJA VIJAKA, PRESJEK U OSI 9 (M1:50)
BOLTS LAYOUT, SECTION IN AXIS 9 (Sc1:50)

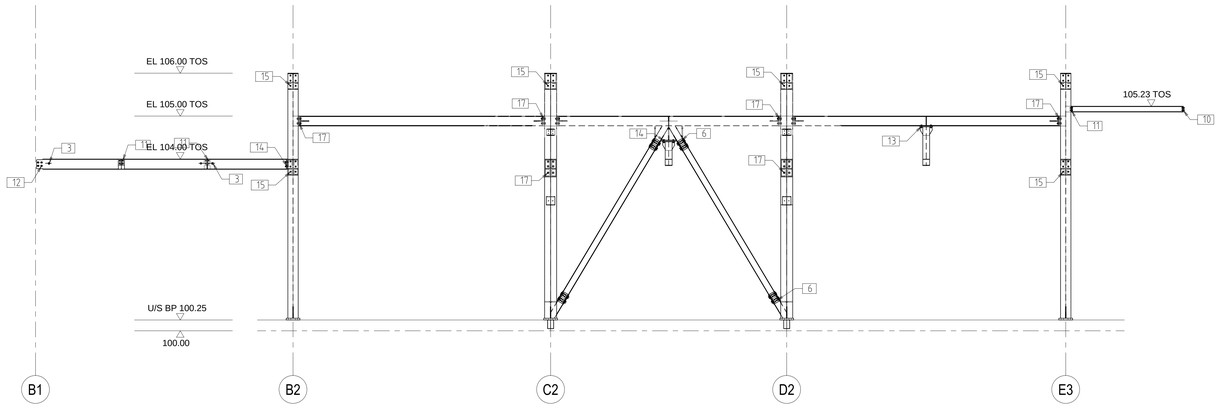

PLAN POZICIJA VIJAKA, PRESJEK U OSI 9a (M1:50)
BOLTS LAYOUT, SECTION IN AXIS 9a (Sc1:50)

GENERAL NOTES

ON THIS DRAWINGS ARE GIVEN:
- SHAPE OF STRUCTURE, POSITION OF ELEMENTS, SERVICE PLATFORMS, RAILINGS, ETC.
- STRUCTURAL MEMBERS SECTION
-CONNECTIONS ARE DESIGNED ACCORDING STATICAL CALCULATIONS

ALL HEIGHTS REFER TO TOP OF STEEL UNLESS OTHERWISE NOTED
TOS = TOP OF STEEL
TOG = TOP OF GRATING
BOS = BOTTOM OF STEEL
FP = FIXPOINT
SP = SLIDINGPOINT
TOC= TOP OF CONCRETE
U/S BP= UNDERSIDE OF BASE PLATE

MATERIALS
ACCORDING TO SPECIFICATION STRUCTURAL STEEL: S 235 JRG2
RAILING, LADDERS: S 235 JRG1
GRATINGS: 30X30X3 HOT DIPPED GALVANIZED
BOLTS: QUALITY 8.8 AND 5.6 ACCORDING BOLT LIST AND RELATED DRAWINGS

DIMENSIONS
ALL DIMENSIONS ARE IN MM
ELEVATIONS ARE IN M
L ARE IN M
COORDINATES ARE IN M

GENERALNE NAPOMENE

NA OVOM CRTEŽU SU PRIKAZANI:
- PROFILI STRUKTURE, POZICIJE ELEMENATA, SERVISNIH PLATFORMA, OGRADA, ITD.
- PRESJECI ELEMENATA KONSTRUKCIJE
-SPOJEVI SU IZVEDENI PREMA STATIČKOM PRORAČUNU

SVE VISINE SE ODNOSE NA GORNJU KOTU ČELIKA OSIM AKO DRUGAČIJE NIJE NAZNAČENO:
TOS = GORNJA KOTA ČELIKA
TOG = GORNJA KOTA PODNICA
BOS = DONJA KOTA ČELIKA
FP = FIKSNA TOČKA
SP = KLIZNA TOČKA
TOC= GORNJA KOTA BETONA
U/S BP= DONJA KOTA LEŽAJNE PLOČE

MATERIJALI
PREMA SPECIFIKACIJAMA ČELIČNIH KONSTRUKCIJA: S 235 JRG2
OGRADE, LJESTVE: S 235 JRG1
PODNICE: 30X30X3 VRUĆE POCINČANE
VIJ.K2: KVALITETE 8.8 I 5.6 PREMA SPECIFIKACIJI VIJAKA I REFERENTNIM CRTEŽIMA

MJERE
SVE MJERE SU U MM
VISINE SU U M
L SU U M
KOORDINATE SU U M

ELEVATION REFERENCE SYSTEM OF PLANT
HIGH POINT OF PLATFORM 100.00 M = 32.00 M ABOVE MEAN SEA LEVEL (ASL)
REFERENCN SUSTAV VISINA POSTROJENJA
NAJVIŠA TOČKA OPLOČENJA= 100.00 M= 32.00 M IZNAD RAZINE MORA

PROKON d.o.o. Jakovec
Varaždinska ulica 1 odvojak 13, Varaždin
tel: +385 42 200 555 fax: +385 42 200 554
e-mail: prokon@prokon.hr www.prokon.hr

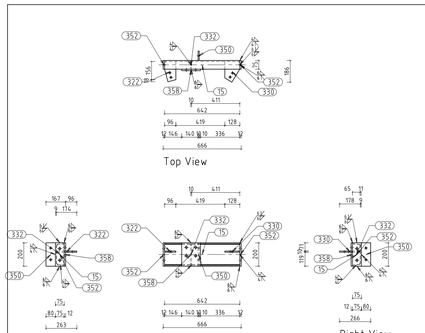

POS. K1 Front View (Sc1:20)
U 200...666 S235 (1 x)

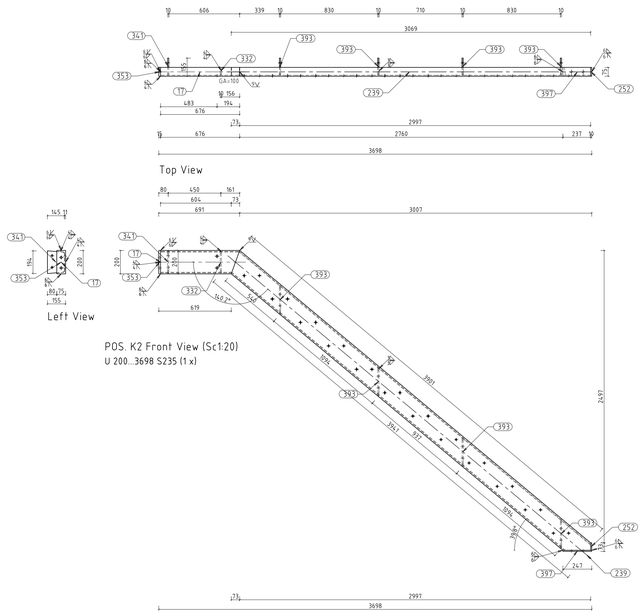

POS. K2 Front View (Sc1:20)
U 200...3698 S235 (1 x)

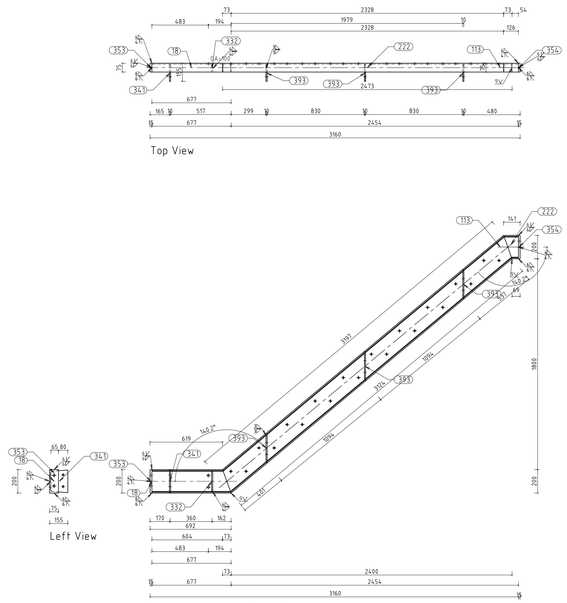

POS. K3 Front View (Sc1:20)
U 200...3160 S235 (1 x)

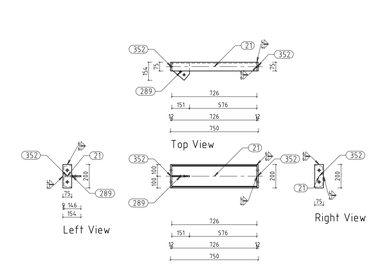

POS. K4 Front View (Sc1:20)
U 200...750 S235 (2 x)

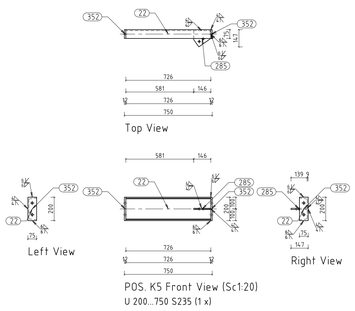

POS. K5 Front View (Sc1:20)
U 200...750 S235 (1 x)

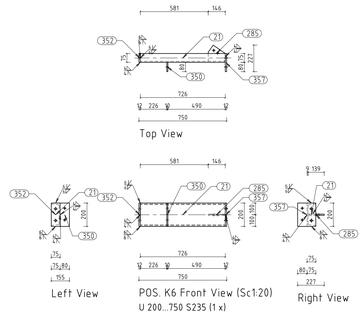

POS. K6 Front View (Sc1:20)
U 200...750 S235 (1 x)

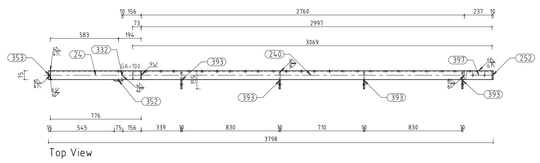

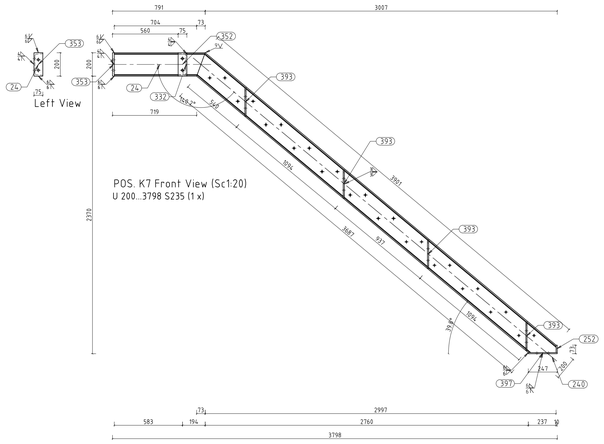

POS. K7 Front View (Sc1:20)
U 200...3798 S235 (1 x)

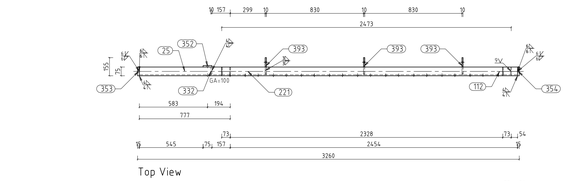

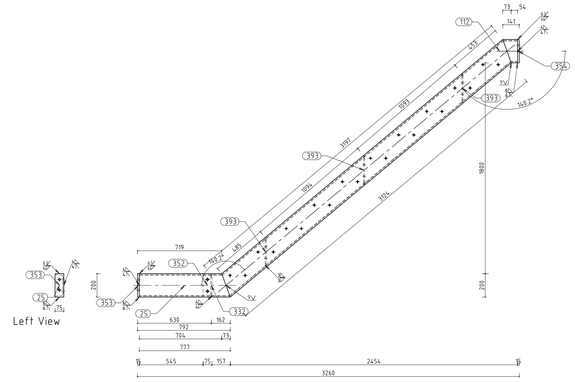

POS. K8 Front View (Sc1:20)
U 200...3260 S235 (1 x)

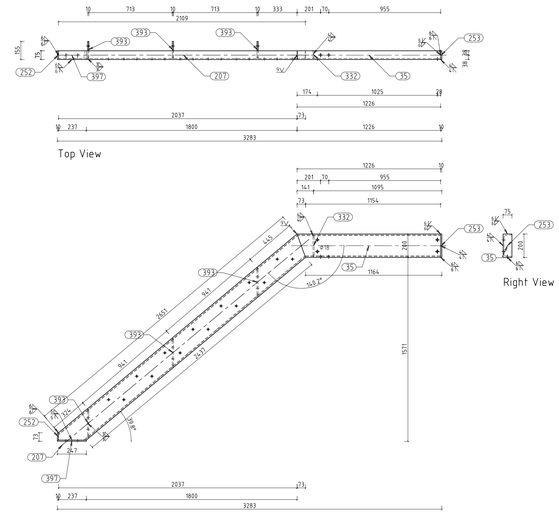

POS. K9 Front View (Sc1:20)
U 200...3283 S235 (1 x)

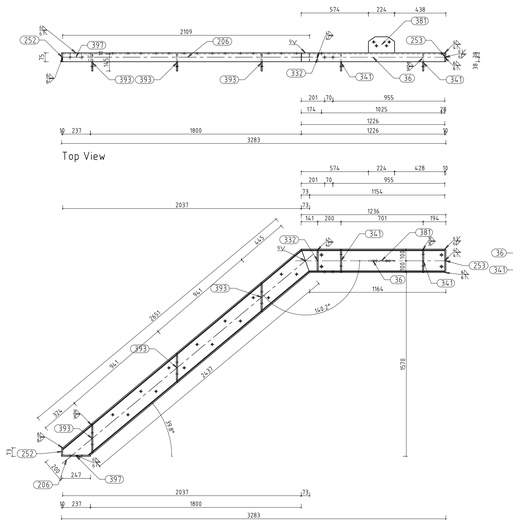

POS. K10 Front View (Sc1:20)
U 200...3283 S235 (1 x)

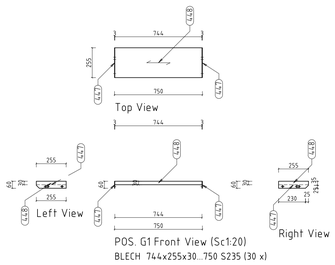

POS. G1 Front View (Sc1:20)
BLECH 744x255x30...750 S235 (30 x)

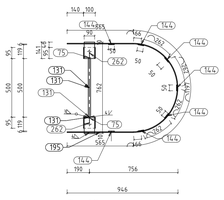

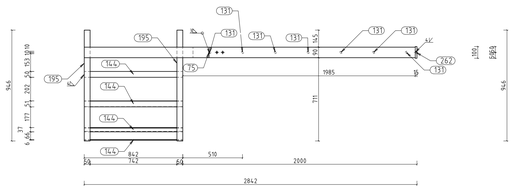

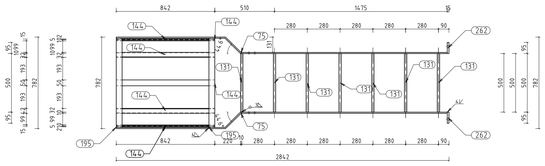

POS. L1 Front View (Sc1:20)
RD 20...782 S235 (1 x)

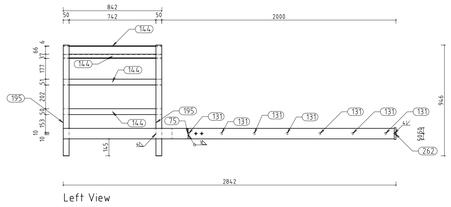

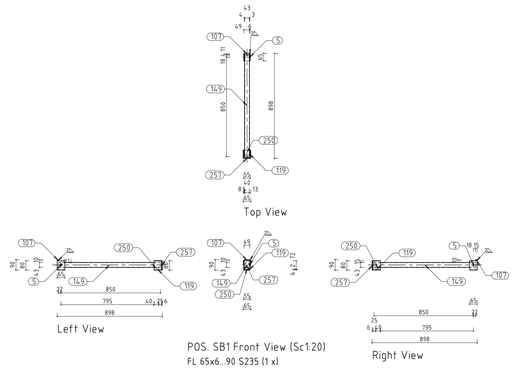

POS. SB1 Front View (Sc1:20)
FL 65x6...90 S235 (1 x)

VAROVI AKO NISU POSEBNO NAZNAČENI:

kutni varovi : a=0.7 t min	
varovi sa obradom - sučelni varovi	
varovi sa obradom - kutni varovi a=s	

GENERAL NOTES

ON THIS DRAWINGS ARE GIVEN:
- SHAPE OF STRUCTURE, POSITION OF ELEMENTS, SERVICE PLATFORMS, RAILINGS, ETC.
- STRUCTURAL MEMBERS SECTION
-CONNECTIONS ARE DESIGNED ACCORDING STATICAL CALCULATIONS

ALL HEIGHTS REFER TO TOP OF STEEL UNLESS OTHERWISE NOTED
TOS = TOP OF STEEL
TOG = TOP OF GRATING
BOS = BOTTOM OF STEEL
FP = FIXPOINT
SP = SLIDINGPOINT
TOC= TOP OF CONCRETE
U/S BP= UNDERSIDE OF BASE PLATE

MATERIALS
ACCORDING TO SPECIFICATION STRUCTURAL STEEL: S 235 JRG2
RAILING, LADDERS: S 235 JRG1
GRATINGS: 30X30X3 HOT DIPPED GALVANIZED
BOLTS: QUALITY 8.8 AND 5.6 ACCORDING BOLT LIST AND RELATED DRAWINGS

DIMENSIONS
ALL DIMENSIONS ARE IN MM
ELEVATIONS ARE IN M
t, ARE IN M
COORDINATES ARE IN M

GENERALNE NAPOMENE

NA OVOM CRTEŽU SU PRIKAZANI:
- PROFILI STRUKTURE, PODCUJE ELEMENATA, SERVISNIH PLATFORMA, OGRADA, ITD.
- PRESJECI ELEMENATA KONSTRUKCIJE
-SPOJEVI SU IZVEDENI PREMA STATIČKOM PRORAČUNU

SVE VISINE SE ODNOSE NA GORNJU KOTU ČELIKA OSIM AKO DRUGAČIJE NIJE NAZNAČENO:
TOS = GORNJA KOTA ČELIKA
TOG = GORNJA KOTA PODNICA
BOS = DONJA KOTA ČELIKA
FP = FIKSNA TOČKA
SP = KLIZNA TOČKA
TOC= GORNJA KOTA BETONA
U/S BP= DONJA KOTA LEŽAJNE PLOČE

MATERIJALI
PREMA SPECIFIKACIJAMA ČELIČNIH KONSTRUKCIJA: S 235 JRG2
OGRADE, LJESTVE: S 235 JRG1
PODNICE: 30X30X3 VRUĆE POCINČANE
VIJCI: KVALITETE 8.8 I 5.6 PREMA SPECIFIKACIJI VIJAKA I REFERENTNIM CRTEŽIMA

MJERE
SVE MJERE SU U MM
VISINE SU U M
t, SU U M
KOORDINATE SU U M

ELEVATION REFERENCE SYSTEM OF PLANT
HIGH POINT OF PAVING= 100.00 M= 32.00 M ABOVE ORTHOMETRIC SEA LEVEL (ASL)
REFERENN SUSTAV VISINA POSTROJENJA:
NAJVIŠA TOČKA OPLOČENJA= 100.00 M= 32.00 M IZNAD RAZINE MORA

prokon
PROKON d.o.o. Jalkovec
Varaždinska ulica 1,Jalkovečje 13, Varaždin
tel: +385 42 200 555 fax: +385 42 200 554
e-mail: prokon@prokon.hr www.prokon.hr

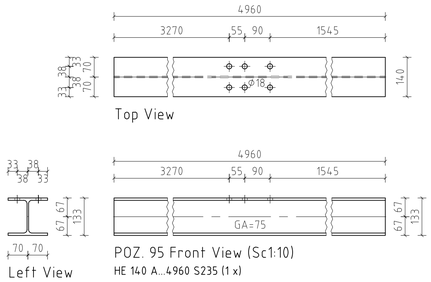

POZ. 95 Front View (Sc1:10)
HE 140 A...4960 S235 (1 x)

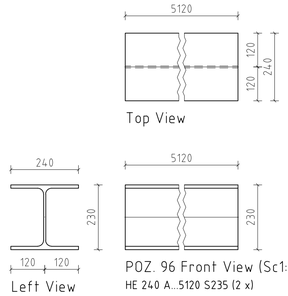

POZ. 96 Front View (Sc1:10)
HE 240 A...5120 S235 (2 x)

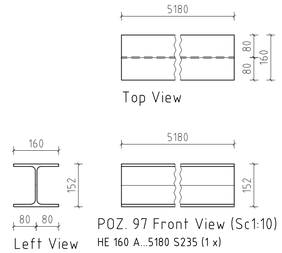

POZ. 97 Front View (Sc1:10)
HE 160 A...5180 S235 (1 x)

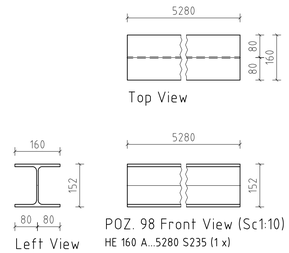

POZ. 98 Front View (Sc1:10)
HE 160 A...5280 S235 (1 x)

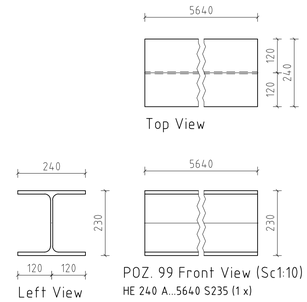

POZ. 99 Front View (Sc1:10)
HE 240 A...5640 S235 (1 x)

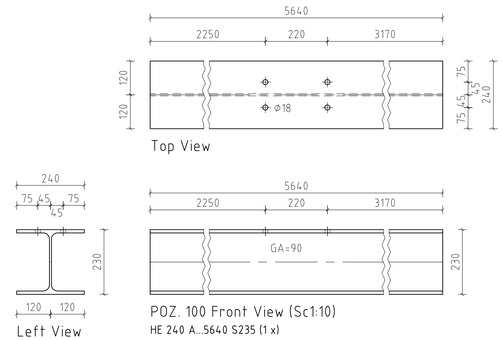

POZ. 100 Front View (Sc1:10)
HE 240 A...5640 S235 (1 x)

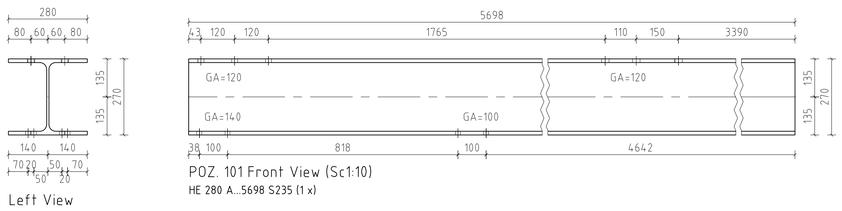

POZ. 101 Front View (Sc1:10)
HE 280 A...5698 S235 (1 x)

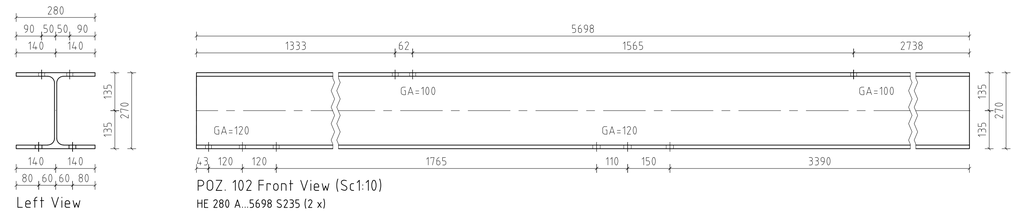

POZ. 102 Front View (Sc1:10)
HE 280 A...5698 S235 (2 x)

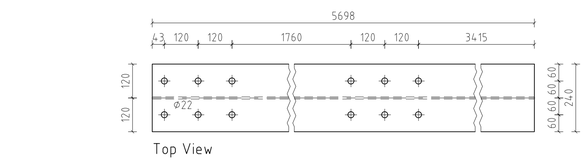

POZ. 103 Front View (Sc1:10)
HE 240 A...5698 S235 (4 x)

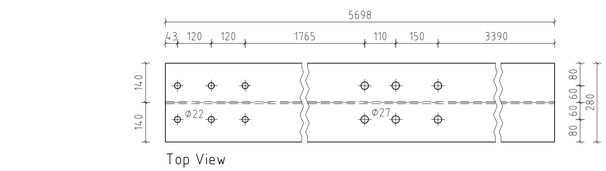

POZ. 104 Front View (Sc1:10)
HE 280 A...5698 S235 (4 x)

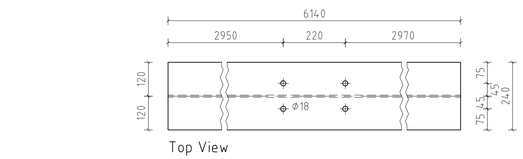

POZ. 105 Front View (Sc1:10)
HE 240 A...6140 S235 (2 x)

GENERAL NOTES

ON THIS DRAWINGS ARE GIVEN:
- SHAPE OF STRUCTURE, POSITION OF ELEMENTS, SERVICE PLATFORMS, RAILINGS, ETC.
- STRUCTURAL MEMBERS SECTION
-CONNECTIONS ARE DESIGNED ACCORDING STATICAL CALCULATIONS

ALL HEIGHTS REFER TO TOP OF STEEL UNLESS OTHERWISE NOTED
TOS = TOP OF STEEL
TOG = TOP OF GRATING
BOS = BOTTOM OF STEEL
FP = FIXPOINT
SP = SLIDINGPOINT
TOC= TOP OF CONCRETE
U/S BP= UNDERSIDE OF BASE PLATE

MATERIALS:
ACCORDING TO SPECIFICATION STRUCTURAL STEEL: S 235 JRG2
RAILING, LADDERS: S 235 JRG1
GRATINGS: 30X30X3 HOT DIPPED GALVANIZED
BOLTS: QUALITY 8.8 AND 5.6 ACCORDING BOLT LIST AND RELATED DRAWINGS

DIMENSIONS
ALL DIMENSIONS ARE IN MM
ELEVATIONS ARE IN M
℄ ARE IN M
COORDINATES ARE IN M

GENERALNE NAPOMENE

NA OVOM CRTEŽU SU PRIKAZANI:
- PROFILI STRUKTURE, POZICIJE ELEMENATA, SERVISNIH PLATFORMA, OGRADA, ITD.
- PRESJECI ELEMENATA KONSTRUKCIJE
-SPOJEVI SU IZVEDENI PREMA STATIČKOM PRORAČUNU

SVE VISINE SE ODNOSE NA GORNJU KOTU ČELIKA OSIM AKO DRUGAČIJE NIJE NAZNAČENO:
TOS = GORNJA KOTA ČELIKA
TOG = GORNJA KOTA PODNICA
BOS = DONJA KOTA ČELIKA
FP = FIKSNA TOČKA
SP = KLIZNA TOČKA
TOC= GORNJA KOTA BETONA
U/S BP= DONJA KOTA LEŽAJNE PLOČE

MATERIJALI
PREMA SPECIFIKACIJAMA ČELIČNIH KONSTRUKCIJA: S 235 JRG2
OGRADE, LJESTVE: S 235 JRG1
PODNICE: 30X30X3 VRUČE POCINČANE
VIJCI: KVALITETE 8.8 I 5.6 PREMA SPECIFIKACIJI VIJAKA I REFERENTNIM CRTEŽIMA

MJERE
SVE MJERE SU U MM
VISINE SU U M
℄ SU U M
KOORDINATE SU U M

ELEVATION REFERENCE SYSTEM OF PLANT:
HIGH POINT OF PAVING= 100.00 M= 32.00 M ABOVE ADRIATIC SEA LEVEL (ASL)
REFERENTNI SUSTAV VISINA POSTROJENJA:
NAJVIŠA TOČKA OPLOČENJA= 100.00 M= 32.00 M IZNAD RAZINE MORA

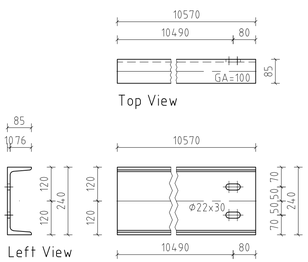

POZ. 106 Front View (Sc1:10)
U 240...10570 S235 (1 x)

POZ. 107 Top View (Sc1:10)
FL 15x10...49 S235 (1 x)

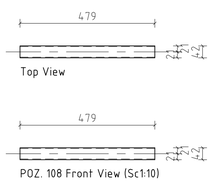

POZ. 108 Front View (Sc1:10)
RO 42.4x2.6...479 S235 (1 x)

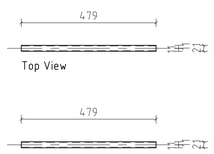

POZ. 109 Front View (Sc1:10)
RO 21.3x2.6...479 S235 (3 x)

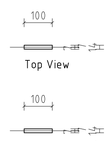

POZ. 110 Front View (Sc1:10)
RD 14...100 S235 (185 x)

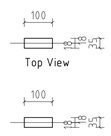

POZ. 111 Front View (Sc1:10)
RD 35...100 S235 (61 x)

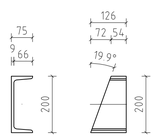

POZ. 112 Front View (Sc1:10)
U 200...126 S235 (1 x)

PROKON d.o.o. Jalkovec
Varaždinska ulica 1,odvojak 13, Varaždin
tel: +385 42 200 555 fax: +385 42 200 554
e-mail: prokon@prokon.hr www.prokon.hr

SPECIFIKACIJA MATERIJALA / MATERIAL LIST

ELEMENTI PO SKLOPOVIMA / ELEMENTS BY ASSEMBLIES

Position Pozicija	Count Količina kom.	Name Naziv	Material Materijal	Length Duljina mm	Weight Težina kg	Tot. weight Uk. težina kg
C1	**1**	**U 240**		**10590,0**	**841,7**	**841,7**
106,0	1	U 240	S235	10570,0	350,9	350,9
140,0	3	HE 100 A	S235	800,0	13,4	40,1
153,0	1	U 160	S235	990,5	18,6	18,6
154,0	2	U 160	S235	990,5	18,6	37,2
156,0	1	L 60x6	S235	1075,8	5,8	5,8
160,0	1	L 60x6	S235	1178,6	6,4	6,4
169,0	8	L 60x6	S235	1358,1	7,4	58,9
242,0	1	U 200	S235	10570,0	267,4	267,4
256,0	12	PLATE 6x45.5	S235	78,0	0,2	1,9
302,0	2	PLATE 15x160	S235	260,0	4,9	9,8
351,0	1	PLATE 15x72.5	S235	200,0		0,0
355,0	1	PLATE 15x99	S235	200,0		0,0
379,0	1	PLATE 20x200	S235	220,0	6,9	6,9
380,0	1	PLATE 10x160.5	S235	221,9		0,0
410,0	1	PLATE 20x200	S235	260,0	8,2	8,2
414,0	1	PLATE 10x140	S235	264,2	2,7	2,7
417,0	1	PLATE 10x148.5	S235	271,5		0,0
423,0	4	PLATE 10x130.5	S235	296,9	2,8	11,2
424,0	4	PLATE 10x140	S235	296,9	3,0	12,1
G1	**30**	**BLECH 744x255x30**		**750,0**	**6,0**	**179,4**
447,0	2	PLATE 3x60	S235	255,0	0,4	0,7
448,0	1	BLECH 30x255	S235	744,0	5,3	5,3
L1	**1**	**RD 20**		**782,0**	**76,8**	**76,8**
75,0	2	FL 90x10	S235	2880,3	20,4	40,7
131,0	7	RD 20	S235	500,0	1,2	8,6
144,0	7	FL 50x6	S235	842,0	2,0	13,9
195,0	2	FL 50x6	S235	2317,6	5,5	10,9
262,0	2	PLATE 15x95	S235	100,0	1,1	2,2
SB1	**1**	**FL 65x6**		**90,0**	**4,0**	**4,0**
5,0	1	FL 65x6	S235	198,7	0,6	0,6
107,0	1	FL 15x10	S235	49,0	0,1	0,1
119,0	1	FL 65x6	S235	199,6	0,6	0,6
149,0	1	RO 42.4x2.6	S235	871,0	2,2	2,2
250,0	1	PLATE 15x40	S235	40,0	0,2	0,2
257,0	1	PLATE 6x65	S235	79,8	0,2	0,2
K1	**1**	**U 200**		**666,0**	**25,2**	**25,2**
15,0	1	U 200	S235	642,0	16,2	16,2
322,0	1	PLATE 10x96	S235	174,1		0,0
330,0	1	PLATE 10x127.5	S235	177,5		0,0
332,0	1	PLATE 10x64.5	S235	181,0	0,9	0,9
350,0	1	PLATE 10x80	S235	200,0	1,3	1,3
352,0	2	PLATE 12x75	S235	200,0	1,4	2,8
358,0	1	PLATE 12x160	S235	200,0	3,0	3,0
K2	**1**	**U 200**		**3697,6**	**136,0**	**136,0**
17,0	1	U 200	S235	676,0	17,1	17,1
239,0	1	U 200	S235	3940,9	99,7	99,7
252,0	1	PLATE 10x63	S235	75,0	0,4	0,4
332,0	1	PLATE 10x64.5	S235	181,0	0,9	0,9
341,0	1	PLATE 10x144.5	S235	193,8	2,1	2,1
353,0	1	PLATE 15x75	S235	200,0	1,8	1,8
393,0	4	PLATE 10x144.5	S235	244,0	2,6	10,4
397,0	1	PLATE 10x75	S235	247,0	1,5	1,5
K3	**1**	**U 200**		**3160,0**	**117,7**	**117,7**
18,0	1	U 200	S235	676,4	17,1	17,1

SPECIFIKACIJA MATERIJALA / MATERIAL LIST

ELEMENTI / ELEMENTS

Position Pozicija	Count Količina kom	Name Naziv	Material Materijal	Length Duljina mm	Tot. length Uk. duljina mm	Weight Težina kg	Tot. weight Uk. težina kg
1	2	HE 140 A	S235	200,0	400,0	4,9	9,9
2	2	HE 140 A	S235	200,0	400,0	4,9	9,9
3	18	RO 21.3x2.6	S235	156,0	2808,5	0,2	3,4
4	34	RO 21.3x2.6	S235	196,7	6686,3	0,2	8,1
5	1	FL 65x6	S235	198,7	198,7	0,6	0,6
6	1	L 80x7	S235	506,9	506,9	4,3	4,3
7	1	RO 42.4x2.6	S235	204,6	204,6	0,5	0,5
8	3	RO 21.3x2.6	S235	213,6	640,7	0,3	0,8
9	1	RO 42.4x2.6	S235	221,9	221,9	0,6	0,6
10	3	RO 21.3x2.6	S235	253,7	761,2	0,3	0,9
11	1	HE 160 A	S235	426,0	426,0	13,0	13,0
12	1	HE 160 A	S235	527,0	527,0	16,0	16,0
13	1	HE 160 A	S235	576,0	576,0	17,5	17,5
14	1	RO 42.4x2.6	S235	614,0	614,0	1,6	1,6
15	1	U 200	S235	642,0	642,0	16,2	16,2
16	1	RO 42.4x2.6	S235	674,0	674,0	1,7	1,7
17	1	U 200	S235	676,0	676,0	17,1	17,1
18	1	U 200	S235	676,4	676,4	17,1	17,1
19	1	RO 42.4x2.6	S235	699,0	699,0	1,8	1,8
20	1	HE 140 A	S235	703,0	703,0	17,4	17,4
21	3	U 200	S235	726,0	2178,0	18,4	55,1
22	1	U 200	S235	726,0	726,0	18,4	18,4
23	1	RO 42.4x2.6	S235	745,8	745,8	1,9	1,9
24	1	U 200	S235	776,0	776,0	19,6	19,6
25	1	U 200	S235	776,4	776,4	19,6	19,6
26	1	RO 42.4x2.6	S235	855,0	855,0	2,2	2,2
27	1	RO 42.4x2.6	S235	891,0	891,0	2,3	2,3
28	1	RO 42.4x2.6	S235	902,4	902,4	2,3	2,3
29	1	RO 42.4x2.6	S235	1056,7	1056,7	2,7	2,7
30	1	HE 140 A	S235	1143,5	1143,5	28,2	28,2
31	2	HE 160 A	S235	1150,0	2300,0	35,0	69,9
32	1	HE 160 A	S235	1160,0	1160,0	35,3	35,3
33	3	HE 140 A	S235	1203,0	3609,0	29,7	89,1
34	1	RO 42.4x2.6	S235	1208,0	1208,0	3,1	3,1
35	1	U 200	S235	1226,0	1226,0	31,0	31,0
36	1	U 200	S235	1226,0	1226,0	31,0	31,0
37	1	HE 160 A	S235	1242,0	1242,0	37,8	37,8
38	4	IPE 140	S235	1242,0	4968,0	16,0	64,1
39	1	RO 42.4x2.6	S235	1242,4	1242,4	3,2	3,2
40	1	HE 140 A	S235	1262,0	1262,0	31,2	31,2
41	1	RO 42.4x2.6	S235	1352,4	1352,4	3,5	3,5
42	1	RO 42.4x2.6	S235	1473,0	1473,0	3,8	3,8
43	1	HE 160 A	S235	1569,0	1569,0	47,7	47,7
44	1	RO 42.4x2.6	S235	1670,0	1670,0	4,3	4,3
45	2	HE 160 A	S235	1675,0	3350,0	50,9	101,8
46	10	HE 140 A	S235	1730,0	17300,0	42,7	427,3
47	3	HE 140 A	S235	1730,0	5190,0	42,7	128,2
48	1	HE 140 A	S235	1730,0	1730,0	42,7	42,7
49	1	RO 42.4x2.6	S235	1891,2	1891,2	4,9	4,9
50	1	RO 42.4x2.6	S235	2435,0	2435,0	6,3	6,3
51	1	RO 42.4x2.6	S235	1536,0	1536,0	3,9	3,9
52	1	HE 200 A	S235	2110,0	2110,0	89,3	89,3
53	1	RO 42.4x2.6	S235	2166,2	2166,2	5,6	5,6
54	1	RO 42.4x2.6	S235	278,5	278,5	0,7	0,7
55	2	HE 140 A	S235	2260,7	4521,3	55,8	111,7

SPECIFIKACIJA MATERIJALA / MATERIAL LIST

POPIS SKLOPOVA / ASSEMBLIES LIST

Position Pozicija	Count Komada kom.	Name Naziv	Length Duljina mm	Weight Težina kg	Tot. Weight Uk. težina kg
C1	1	U 240	10590,0	841,7	841,7
G1	30	BLECH 744x255x30	750,0	6,0	179,4
L1	1	RD 20	782,0	76,8	76,8
SB1	1	FL 65x6	90,0	4,0	4,0
K1	1	U 200	666,0	25,2	25,2
K2	1	U 200	3697,6	136,0	136,0
K3	1	U 200	3160,0	117,7	117,7
K4	2	U 200	750,0	22,0	44,0
K5	1	U 200	750,0	22,0	22,0
K6	1	U 200	750,0	24,8	24,8
K7	1	U 200	3797,6	137,8	137,8
K8	1	U 200	3260,0	119,6	119,6
K9	1	U 200	3282,6	112,1	112,1
K10	1	U 200	3282,6	118,8	118,8
M1	1	HE 160 A	551,0	22,3	22,3
M2	1	HE 140 A	727,0	33,2	33,2
M3	1	HE 140 A	1158,5	39,4	39,4
M4	1	HE 140 A	1227,0	45,7	45,7
M5	1	HE 140 A	1227,0	47,1	47,1
M6	1	HE 140 A	1227,0	49,2	49,2
M7	1	HE 140 A	1286,0	36,1	36,1
M8	1	HE 200 A	2150,0	147,4	147,4
M9	1	HE 140 A	2436,0	70,1	70,1
M10	1	HE 140 A	2436,0	78,2	78,2
M11	1	HE 140 A	2436,0	78,2	78,2
M12	1	HE 140 A	2436,0	80,4	80,4
M13	1	HE 160 A	2436,0	87,1	87,1
M14	1	HE 160 A	2436,0	84,8	84,8
M15	1	HE 140 A	2603,0	68,6	68,6
M16	2	HE 240 A	2730,0	237,5	475,0
M17	2	HE 240 A	2730,0	214,5	429,0
M18	2	HE 240 A	2770,0	216,9	433,8
M19	1	HE 240 A	2770,0	216,9	216,9
M20	1	HE 140 A	3216,0	86,6	86,6
M21	1	HE 140 A	3226,0	84,3	84,3
M22	2	HE 140 A	3236,0	84,2	168,4
M23	1	HE 140 A	3267,0	105,7	105,7
M24	1	HE 140 A	3267,0	97,6	97,6
M25	1	HE 140 A	3267,0	100,9	100,9
M26	1	HE 140 A	3267,0	100,5	100,5
M27	1	HE 140 A	3267,0	99,6	99,6
M28	1	HE 140 A	3267,0	101,5	101,5
M29	1	HE 140 A	3536,0	99,4	99,4
M30	1	HE 140 A	3536,0	99,9	99,9
M31	1	HE 140 A	3536,0	91,6	91,6
M32	1	HE 140 A	3536,0	98,7	98,7
M33	1	HE 140 A	3541,0	105,8	105,8
M34	1	HE 140 A	3686,0	100,5	100,5
M35	1	HE 140 A	4186,0	112,9	112,9
M36	1	HE 140 A	4186,0	112,9	112,9
M37	2	HE 240 A	5170,0	397,8	795,7
M38	1	HE 240 A	5690,0	366,6	366,6
M39	1	HE 240 A	5690,0	370,9	370,9
M40	2	HE 240 A	6190,0	401,1	802,1
M41	1	HE 140 A	488,0	18,1	18,1

STRUKTURA_E / STRUCTURE_E

SPECIFIKACIJA VIJAKA / BOLTS LIST

Position Pozicija	Count Komada kom	Name Naziv	Material Materijal	Length Duljina mm	Weight Težina kg	Tot. weight Total kg
1	**142**	**M 12x35 DIN933**	**5,6**	**35,00**	**0,08**	**11,08**
1a	284	Scheibe A 13 DIN125	5			
1b	142	Mu 12 DIN 934	5			
2	**190**	**M 12x35 DIN933**	**8,8**	**35,00**	**0,08**	**14,82**
2a	380	Scheibe A 13 DIN125	8			
2b	190	Mu 12 DIN 934	8			
3	**72**	**M 12x40 DIN933**	**5,6**	**40,00**	**0,08**	**5,98**
3a	144	Scheibe A 13 DIN125	5			
3b	72	Mu 12 DIN 934	5			
4	**22**	**M 12x40 DIN933**	**8,8**	**40,00**	**0,08**	**1,83**
4a	44	Scheibe A 13 DIN125	8			
4b	22	Mu 12 DIN 934	8			
5	**42**	**M 12x40 DIN933**	**5,6**	**40,00**	**0,08**	**3,49**
5a	84	Scheibe A 13 DIN125	5			
5b	42	Mu 12 DIN 934	5			
6	**264**	**M 12x45 DIN931**	**8,8**	**45,00**	**0,09**	**22,97**
6a	528	Scheibe A 13 DIN125	8			
6b	264	Mu 12 DIN 934	8			
7	**84**	**M 16x45 DIN931**	**8,8**	**45,00**	**0,16**	**11,81**
7a	168	Scheibe A 17 DIN125	8			
7b	84	Mu 16 DIN 934	8			
8	**4**	**M 16x50 DIN931**	**8,8**	**50,00**	**0,03**	**0,13**
8a	8	Scheibe A 17 DIN125	8			
8b	4	Mu 16 DIN 934	8			
8c	4	U-Scheibe DIN434	8			
9	**2**	**M 12x50 DIN931**	**8,8**	**50,00**	**0,09**	**0,18**
9a	4	Scheibe A 13 DIN125	8			
9b	2	Mu 12 DIN 934	8			
10	**224**	**M 16x50 DIN931**	**8,8**	**50,00**	**0,17**	**33,71**
10a	448	Scheibe A 17 DIN125	8			
10b	224	Mu 16 DIN 934	8			
11	**152**	**M 16x55 DIN931**	**8,8**	**55,00**	**0,17**	**22,91**
11a	304	Scheibe A 17 DIN125	8			
11b	152	Mu 16 DIN 934	8			
12	**8**	**M 20x55 DIN933**	**8,8**	**55,00**	**0,31**	**1,22**
12a	16	Scheibe A 21 DIN125	8			
12b	8	Mu 20 DIN 934	8			
13	**26**	**M 16x60 DIN931**	**8,8**	**60,00**	**0,19**	**4,86**
13a	52	Scheibe A 17 DIN125	8			
13b	26	Mu 16 DIN 934	8			
14	**16**	**M 16x65 DIN931**	**8,8**	**65,00**	**0,17**	**2,06**
14a	32	Scheibe A 17 DIN125	8			
14b	16	Mu 16 DIN 934	8			
15	**92**	**M 20x65 DIN931**	**8,8**	**65,00**	**0,33**	**27,72**
15a	184	Scheibe A 21 DIN125	8			
15b	92	Mu 20 DIN 934	8			

STRUKTURA_E / STRUCTURE_E

SPECIFIKACIJA MATERIJALA / MATERIAL LIST

VIJCI PO SKLOPU / BOLTS BY ASSEMBLIES

Position Pozicija	Count Količina kom.	Name Naziv	Material Materijal	Length Duljina mm
C1				
13	8	M 16x60 DIN931	8,8	60,00
13a	16	Scheibe A 17 DIN125	8	
13b	8	Mu 16 DIN 934	8	
18	2	M 20x140 DIN931	8,8	140,00
18a	4	Scheibe A 21 DIN125	8	
18b	2	Mu 20 DIN 934	8	
19	2	M 20x150 DIN931	8,8	150,00
19a	4	Scheibe A 21 DIN125	8	
19b	2	Mu 20 DIN 934	8	
G1				
K1				
2	2	M 12x35 DIN933	8,8	35,00
2a	4	Scheibe A 13 DIN125	8	
2b	2	Mu 12 DIN 934	8	
4	2	M 12x40 DIN933	8,8	40,00
4a	4	Scheibe A 13 DIN125	8	
4b	2	Mu 12 DIN 934	8	
10	4	M 16x50 DIN931	8,8	50,00
10a	8	Scheibe A 17 DIN125	8	
10b	4	Mu 16 DIN 934	8	
L1				
6	4	M 12x45 DIN931	8,8	45,00
6a	8	Scheibe A 13 DIN125	8	
6b	4	Mu 12 DIN 934	8	
M1				
4	4	M 12x40 DIN933	8,8	40,00
4a	8	Scheibe A 13 DIN125	8	
4b	4	Mu 12 DIN 934	8	
10	8	M 16x50 DIN931	8,8	50,00
10a	16	Scheibe A 17 DIN125	8	
10b	8	Mu 16 DIN 934	8	
N1				
11	4	M 16x55 DIN931	8,8	55,00
11a	8	Scheibe A 17 DIN125	8	
11b	4	Mu 16 DIN 934	8	
P1				
10	4	M 16x50 DIN931	8,8	50,00